1mm Pitch, Board to Wire Lock Connector

DF50 Series

■Features

1. It provides clear tactile click and secure mating

Locking function and contact mating occur simultaneously, for a clearer tactile click.(Fig.1)

2. Robust structure resistant to wrenching forces

Thick and robust housing wall provides higher strength against cracking. Insertion depth for mating housings protects against wrenching.(Fig.2)

3. Robust and reliable lance structure

High lance strength by mating with crimp contact on the surface.(Fig.3)

4. Ensured adsorption area eliminates the need for adsorption cap.

Adequate adsorption area is ensured despite the small size, allowing for automatic mounting without adsorption cap.
(*Specifications for adsorption cap may be provided according to your requirements)

5. Insulation outer diameter ϕ0.9mm, compatible with AWG#28

Despite 1 mm Pitch, it is compatible with ϕ0.9mm, UL1061·AWG#28 Cable (ϕ0.127×7)

It provides clear tactile click and secure mating

Timing of locking function

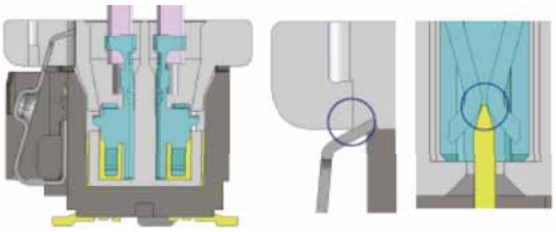

Simultaneous timing of locking function and contact mating provides a clearer tactile click.

Fig.1

Robust structure resistant to wrenching forces

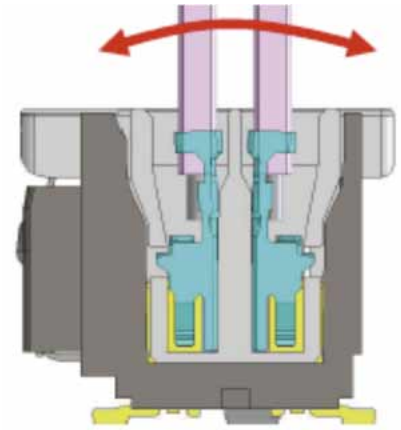

Insertion depth for mating protects against wrenching.
Thick and robust outer wall provides higher strength and prevents cracking.

Fig.2

Robust and reliable lance structure

The lance mates with the crimp contact on the surface.

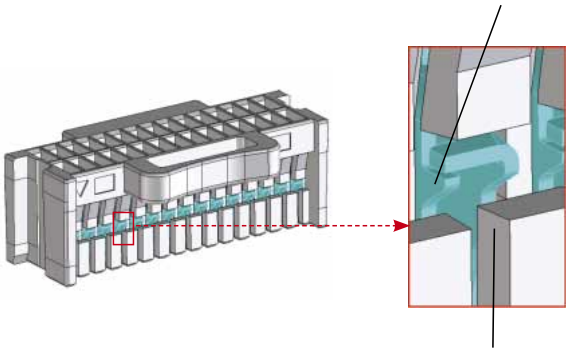

It is possible to visually inspect the assembled lance.

Fig.3

Mar.1.2016 Copyright 2016 HIROSE ELECTRIC CO., LTD. All Rights Reserved.

Mar.1.2016 Copyright 2016 HIROSE ELECTRIC CO., LTD. All Rights Reserved.

■Product Specifications

Ratings	Current Rating	1A	Operating Temperature Range Operating Humidity Range	-35 to + 85°C (Note 1) 20 to 80%
	Voltage Rating	AC/DC 100V	Storage Temperature Range Storage Humidity Range	-10 to + 60°C (Note 2) 40 to 70% (Note 2)

Items	Specifications	Conditions
1.Insulation resistance	500MΩ min.	100V DC
2.Withstand voltage	No flashover or breakdown	300V AC/1min.
3.Contact resistance	30mΩ max.	20mV max., at 1 mA.
4.Vibration	No electrical discontinuity of 1μs or longer	Frequency 10-55 Hz, single amplitude of 0.75 mm 3 directions, 10 cycles in each direction.
5.Shock	No electrical discontinuity of 1μs or longer	Acceleration: 490m/s^2 for 11ms, half sine wave in 3 directions, 3 times for each direction
6.Humidity	Contact resistance: 50mΩ max. Insulation resistance: 100MΩ min.	Temperature: 40±2°C; humidity: 90 to 95%, left for 96 hours
7.Temperature cycles	Contact resistance: 50mΩ max. Insulation resistance: 500MΩ min.	(-55°C: 30 min. → 5 to 35°C: 2 to 3 min. → 85°C: 30 min. → 5 to 35°C: 2 to 3 min.) 5 cycles
8.Durability	Contact resistance: 50mΩ max.	30 times (Number of insertion and withdrawal)
9.Resistance to soldering heat	No deformation of components affecting performance.	Reflow: according to the recommended temperature profile Hand soldering: 350°C for 3 to 4 sec.

(Note 1) Including the temperature rise by current.
(Note 2) Apply to the condition of long term storage for unused products before PCB on board.
After PCB board, operating temperature and humidity range is applied for interim storage during transportation.

■Materials

Product	Part	Materials	Color / Treatment	UL Regulation
Pin header (on the board side)	Insulator	LCP	Black	UL94V-0
	Contact	Brass	Gold plating	———
	Metal fitting	Brass (Note 1)	Tin Plating	———
	Locking metal fitting (DF50)	Stainless steel	———	———
Crimp socket	Insulator	PBT	Black (DF50A)	UL94V-0
			White (DF50S)	
Crimp contact	Contact	Phosphor Bronze	Gold plating	———

(Note 1) Phosphor bronze is applied a material for only to the single-row straight pin header.

■Product Number Structure

●Connector

DF 50 __ – * DP – 1 V **
❶ ❷ ❸ ❹ ❺ ❻ ❼ ❽

❶ Series Name: DF	❼ Mounting style / Wiring type V: SMT Straight Type H: SMT Right Angle Type C: Crimp socket
❷ Series No.: 50	
❸ Form Type: Blank: Double-row pin header S: Double-row crimp socket A: Single-row	❽ Specifications 51: SMT Embossed packaging 52: SMT Embossed packaging (with cap, DF50)
❹ Number of contacts: 20, 30, 40, 50 (Double-row) : 2 to 16 (Single-row)	❾ Applicable wire size 2830: AWG#28, 30 3032: AWG#30, 32 (Under development)
❺ Connector type DP: Double-row pin header DS: Double-row crimp socket P: Single-row pin header S: Single-row crimp socket	❿ Packaging style SCF: Socket contact reel
❻ Contact Pitch: 1mm	⓫ Plating specifications A: Gold plating

●Crimp contact

DF 50 __ – 2830 SCF A
❶ ❷ ❸ ❾ ❿ ⓫

■Double-row straight pin header

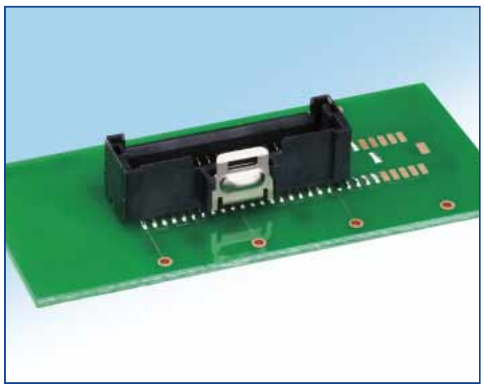

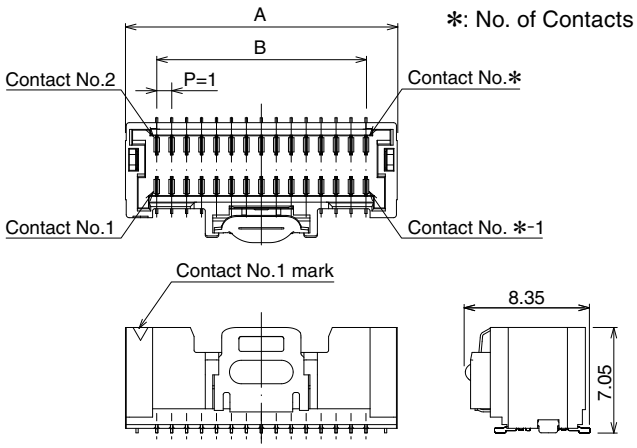

◆Recommended PCB Dimensions

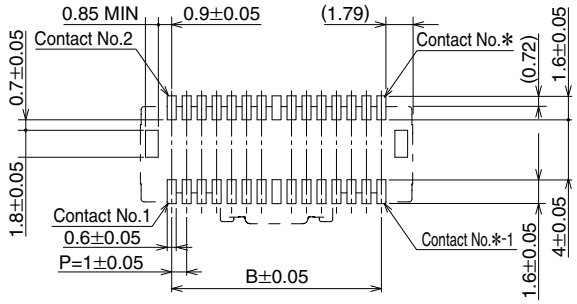

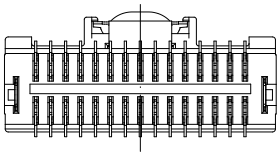

[Specification Number : ∗∗, (∗∗)]
(51): Gold plating, embossed packaging
(52): Gold plating, embossed packaging, with adsorption cap

Unit : mm

Part No.	HRS No.	No. of Contacts	A	B	C	D	E	F	G
DF50-20DP-1V (∗∗)	665-0019-3 ∗∗	20	13.18	9	14.2	28.4	32	38.4	32.4
DF50-30DP-1V (∗∗)	665-0001-8 ∗∗	30	18.18	14					
DF50-40DP-1V (∗∗)	665-0005-9 ∗∗	40	23.18	19	20.2	40.4	44	50.4	44.4
DF50-50DP-1V (∗∗)	665-0011-1 ∗∗	50	28.18	24					

(Note) Please place orders for embossed packaged products by the multiple of the number of reels. (1,000 pcs/reel)

◆Emboss tape dimensions (JIS C 0806 compliant)

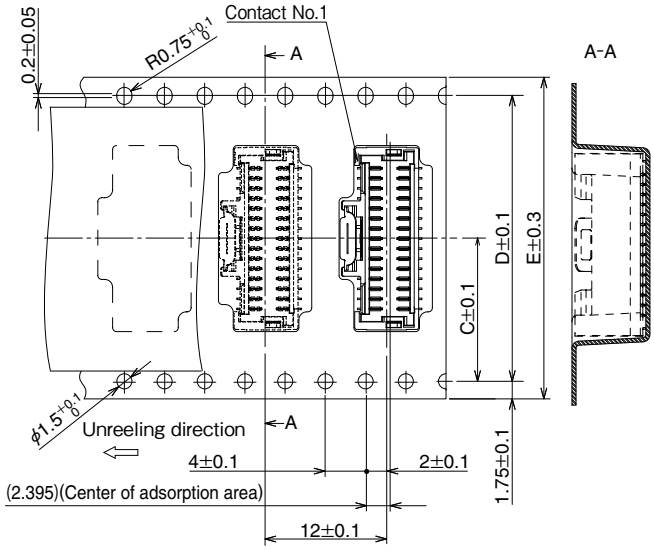

◆Reel Condition Dimensions

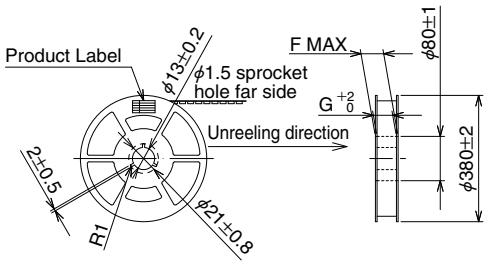

Mar.1.2016 Copyright 2016 HIROSE ELECTRIC CO., LTD. All Rights Reserved.

■Double-row right angle pin header

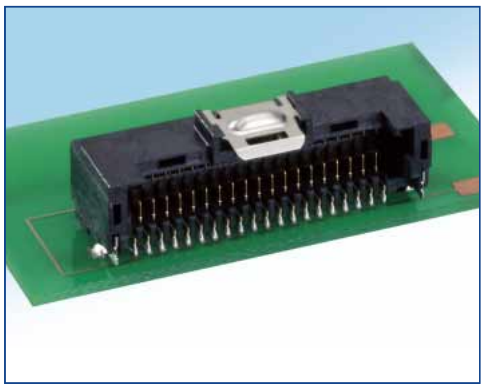

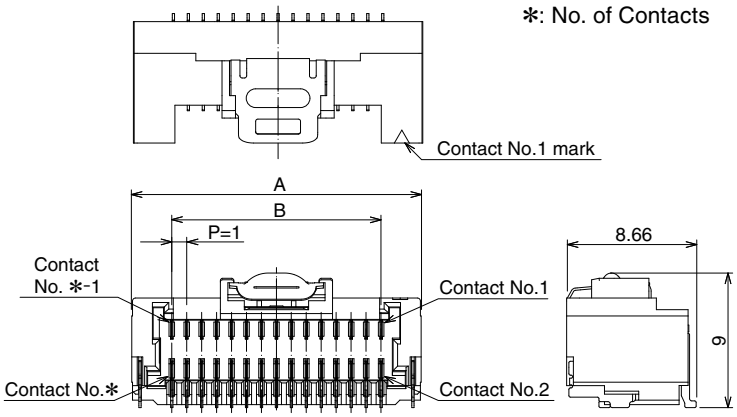

◆Recommended PCB Dimensions

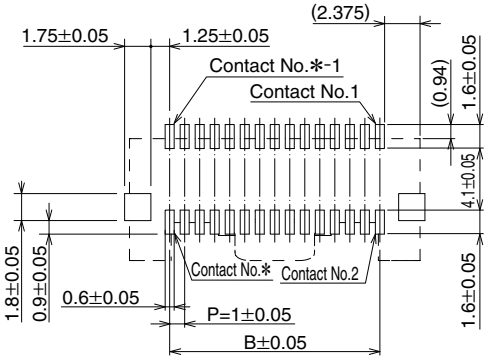

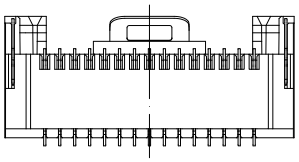

[Specification Number: ∗∗, (∗∗)]
(51): Gold plating, embossed packaging

Unit : mm

Part No.	HRS No.	No. of Contacts	A	B	C	D	E	F	G
DF50-20DP-1H(∗∗)	665-0016-5 ∗∗	20	14.35	9	14.2	28.4	32	38.4	32.4
DF50-30DP-1H(∗∗)	665-0015-2 ∗∗	30	19.35	14	20.2	40.4	44	50.4	44.4
DF50-40DP-1H(∗∗)	665-0014-0 ∗∗	40	24.35	19					
DF50-50DP-1H(∗∗)	665-0013-7 ∗∗	50	29.35	24					

(Note) Please place orders for embossed packaged products by the multiple of the number of reels. (600 pcs/reel)

◆Emboss tape dimensions (JIS C 0806 compliant)

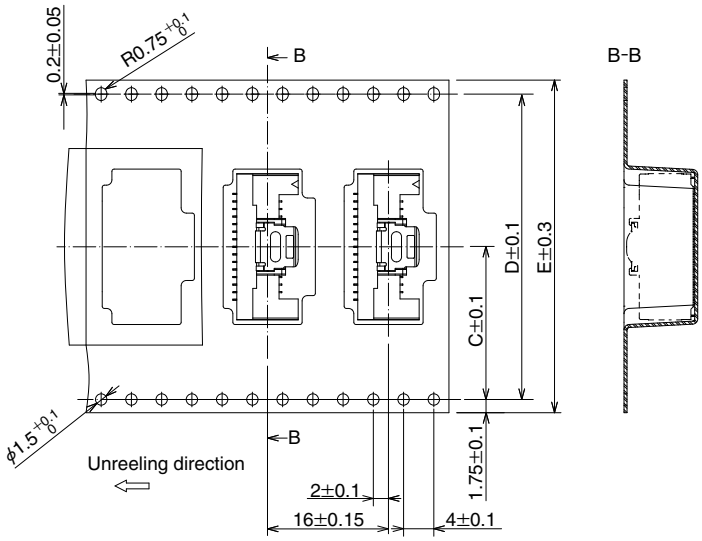

◆Reel Condition Dimensions

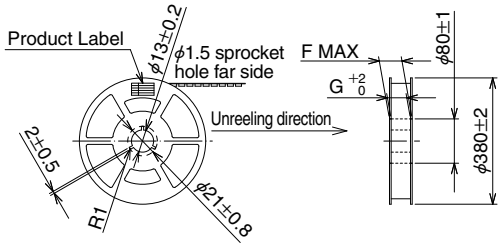

Mar.1.2016 Copyright 2016 HIROSE ELECTRIC CO., LTD. All Rights Reserved.

■Single-row straight pin header

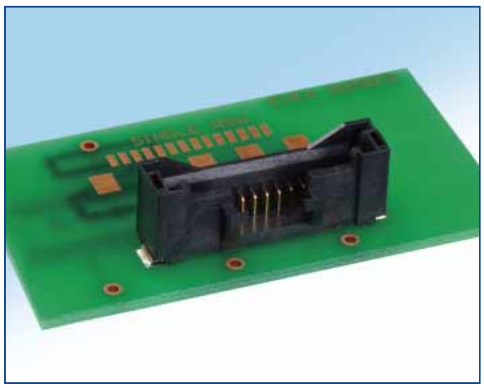

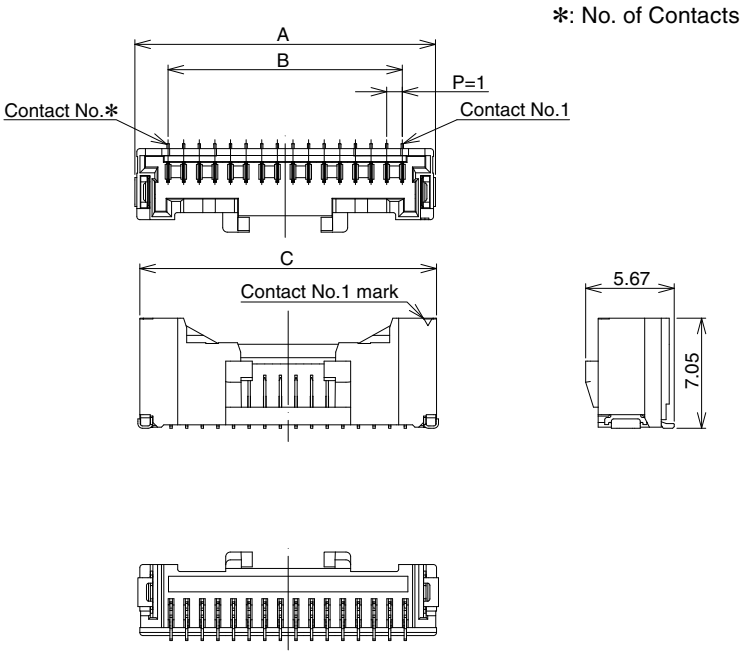

◆Recommended PCB Dimensions

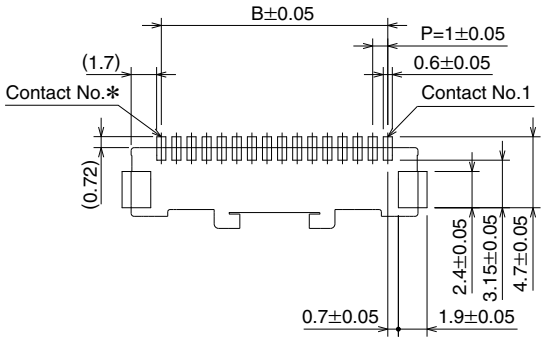

[Specification Number: ∗∗, (∗∗)]
(51): Gold plating, embossed packaging

Unit : mm

Part No.	HRS No.	No. of Contacts	A	B	C
DF50A-2P-1V (∗∗)	665-1001-3 ∗∗	2	5.25	1	5
DF50A-3P-1V (∗∗)	665-1004-1 ∗∗	3	6.25	2	6
DF50A-4P-1V (∗∗)	665-1006-7 ∗∗	4	7.25	3	7
DF50A-5P-1V (∗∗)	665-1008-2 ∗∗	5	8.25	4	8
DF50A-6P-1V (∗∗)	665-1010-4 ∗∗	6	9.25	5	9
DF50A-7P-1V (∗∗)	665-1012-0 ∗∗	7	10.25	6	10
DF50A-8P-1V (∗∗)	665-1014-5 ∗∗	8	11.25	7	11
DF50A-9P-1V (∗∗)	665-1016-0 ∗∗	9	12.25	8	12
DF50A-10P-1V (∗∗)	665-1017-3 ∗∗	10	13.25	9	13
DF50A-11P-1V (∗∗)	665-1019-9 ∗∗	11	14.25	10	14
DF50A-12P-1V (∗∗)	665-1021-0 ∗∗	12	15.25	11	15
DF50A-13P-1V (∗∗)	665-1023-6 ∗∗	13	16.25	12	16
DF50A-14P-1V (∗∗)	665-1025-1 ∗∗	14	17.25	13	17
DF50A-15P-1V (∗∗)	665-1027-7 ∗∗	15	18.25	14	18
DF50A-16P-1V (∗∗)	665-1029-2 ∗∗	16	19.25	15	19

(Note) Please place orders for embossed packaged products by the multiple of the number of reels. (1,000 pcs/reel)

Mar.1.2016 Copyright 2016 HIROSE ELECTRIC CO., LTD. All Rights Reserved.

◆Emboss tape dimensions (JIS C 0806 compliant)

◆Reel Condition Dimensions

●DF50A-2P-1V to DF50A-8P-1V (Number of contacts: 2 to 8)

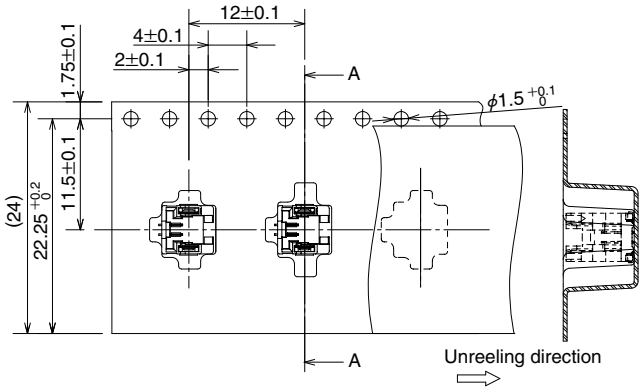

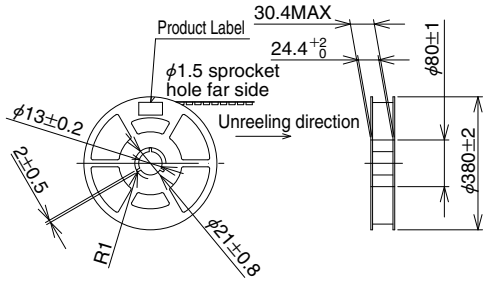

◆Emboss tape dimensions (JIS C 0806 compliant)

◆Reel Condition Dimensions

●DF50A-9P-1V to DF50A-16P-1V (Number of contacts: 9 to 16)

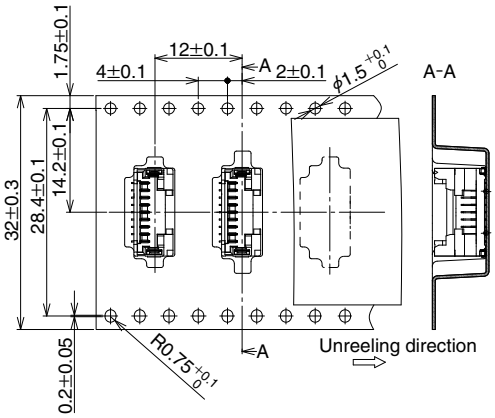

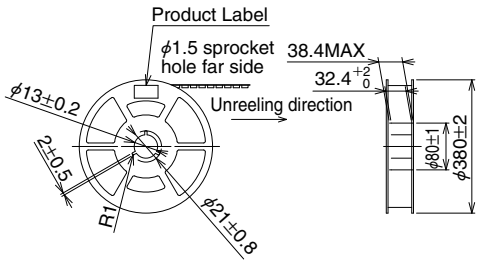

Mar.1.2016 Copyright 2016 HIROSE ELECTRIC CO., LTD. All Rights Reserved.

■Single-row right angle pin header

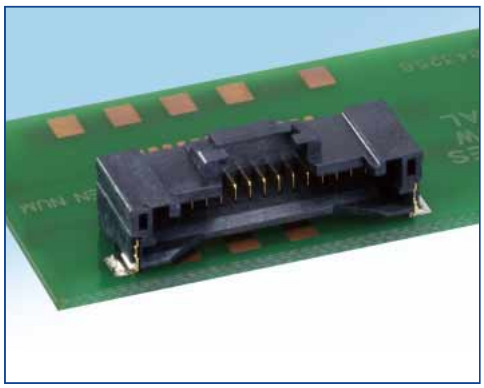

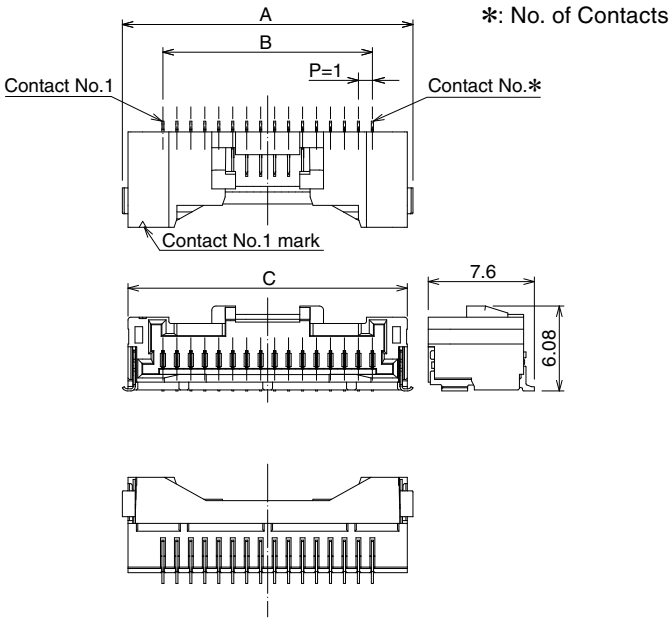

◆Recommended PCB Dimensions

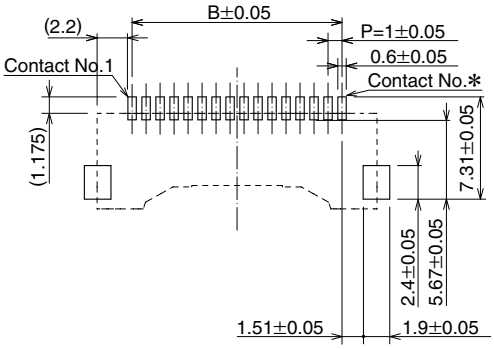

[Specification Number: ∗∗, (∗∗)]
(51): Gold plating, embossed packaging

Unit : mm

Part No.	HRS No.	No. of Contacts	A	B	C
DF50A-2P-1H (∗∗)	665-1031-4 ∗∗	2	6.81	1	6
DF50A-3P-1H (∗∗)	665-1032-7 ∗∗	3	7.81	2	7
DF50A-4P-1H (∗∗)	665-1033-0 ∗∗	4	8.81	3	8
DF50A-5P-1H (∗∗)	665-1034-2 ∗∗	5	9.81	4	9
DF50A-6P-1H (∗∗)	665-1035-5 ∗∗	6	10.81	5	10
DF50A-8P-1H (∗∗)	665-1037-0 ∗∗	8	12.81	7	12
DF50A-10P-1H (∗∗)	665-1039-6 ∗∗	10	14.81	9	14
DF50A-12P-1H (∗∗)	665-1041-8 ∗∗	12	16.81	11	16
DF50A-16P-1H (∗∗)	665-1045-9 ∗∗	16	20.81	15	20

(Note) Please place orders for embossed packaged products by the multiple of the number of reels. (1,000 pcs/reel)

Mar.1.2016 Copyright 2016 HIROSE ELECTRIC CO., LTD. All Rights Reserved.

◆Emboss tape dimensions (JIS C 0806 compliant)

◆Reel Condition Dimensions

●DF50A-2P-1H to DF50A-6P-1H (Number of contacts : 2 to 6)

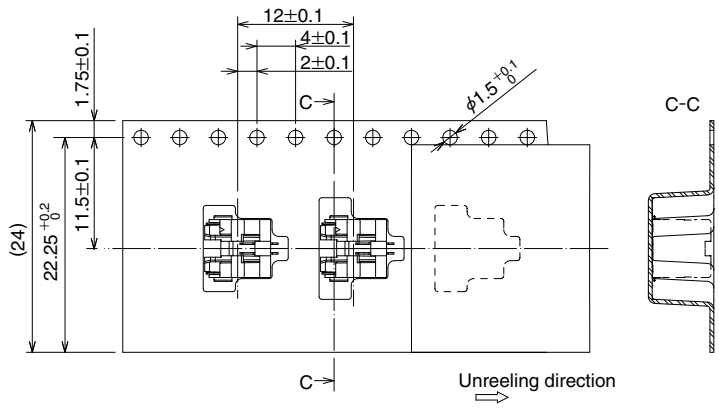

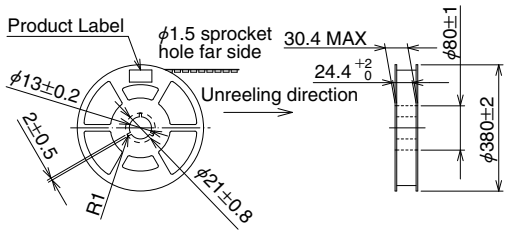

◆Emboss tape dimensions (JIS C 0806 compliant)

◆Reel Condition Dimensions

●DF50A-8P-1H to DF50A-16P-1H (Number of contacts : 8 to 16)

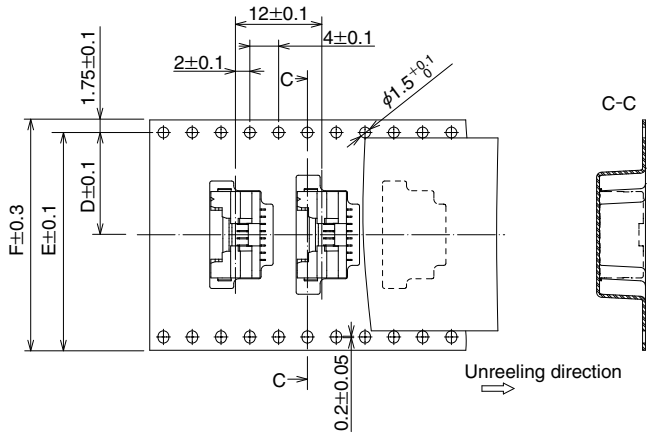

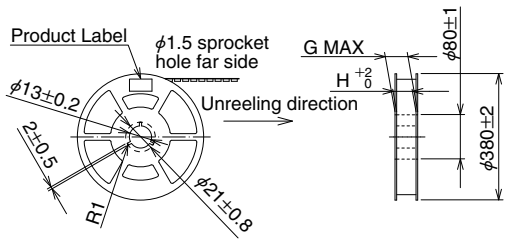

Unit : mm

Part No.	HRS No.	No. of Contacts	D	E	F	G	H
DF50A-8P-1H (**)	665-1037-0 **	8	14.2	28.4	32	38.4	32.4
DF50A-10P-1H (**)	665-1039-6 **	10					
DF50A-12P-1H (**)	665-1041-8 **	12					
DF50A-16P-1H (**)	665-1045-9 **	16	20.2	40.4	44	50.4	44.4

(Note) Please place orders for embossed packaged products by the multiple of the number of reels. (1,000 pcs/reel)

Mar.1.2016 Copyright 2016 HIROSE ELECTRIC CO., LTD. All Rights Reserved.

■Double-row crimp socket

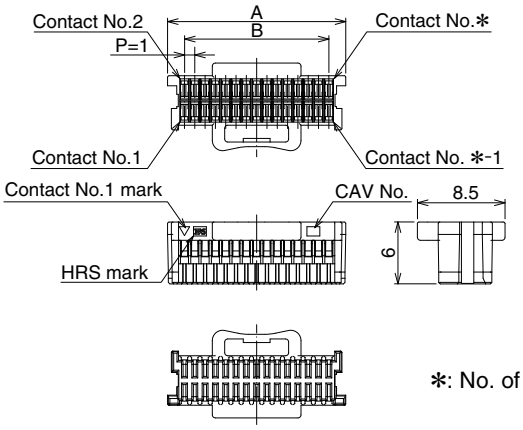

∗: No. of Contacts

Unit : mm

Part No.	HRS No.	No. of Contacts	A	B
DF50S-20DS-1C	665-0020-2 00	20	12.28	9
DF50S-30DS-1C	665-0021-5 00	30	17.28	14
DF50S-40DS-1C	665-0022-8 00	40	22.28	19
DF50S-50DS-1C	665-0012-4 00	50	27.28	24

(Note) Sold in 100 pcs/pack.

■Single-row crimp socket

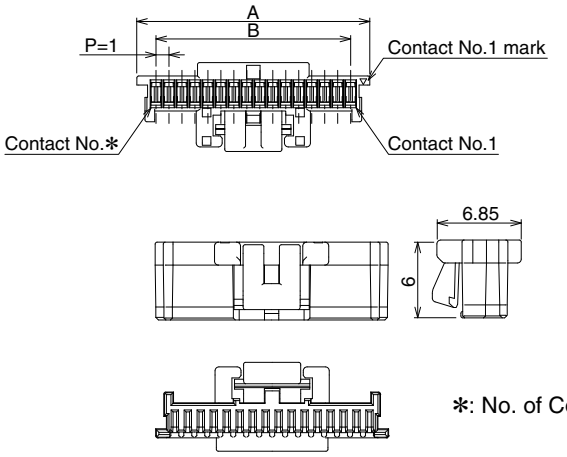

∗: No. of Contacts

Unit : mm

Part No.	HRS No.	No. of Contacts	A	B
DF50A-2S-1C	665-1002-6 00	2	3.95	1
DF50A-3S-1C	665-1005-4 00	3	4.95	2
DF50A-4S-1C	665-1007-0 00	4	5.95	3
DF50A-5S-1C	665-1009-5 00	5	6.95	4
DF50A-6S-1C	665-1011-7 00	6	7.95	5
DF50A-7S-1C	665-1013-2 00	7	8.95	6
DF50A-8S-1C	665-1015-8 00	8	9.95	7
DF50A-9S-1C	665-1100-5 00	9	10.95	8
DF50A-10S-1C	665-1018-6 00	10	11.95	9
DF50A-11S-1C	665-1020-8 00	11	12.95	10
DF50A-12S-1C	665-1022-3 00	12	13.95	11
DF50A-13S-1C	665-1024-9 00	13	14.95	12
DF50A-14S-1C	665-1026-4 00	14	15.95	13
DF50A-15S-1C	665-1028-0 00	15	16.95	14
DF50A-16S-1C	665-1030-1 00	16	17.95	15

(Note) Sold in 100 pcs/pack.

Mar.1.2016 Copyright 2016 HIROSE ELECTRIC CO., LTD. All Rights Reserved.

■Crimp contact

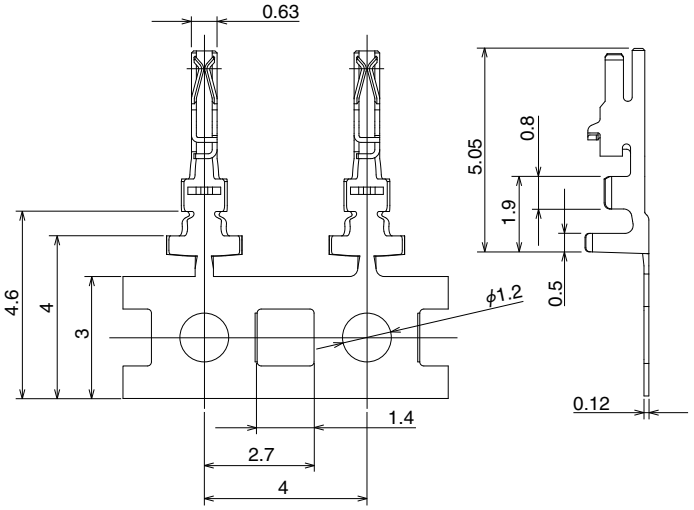

Part No.	HRS No.	Type	Quantity	Treatment
DF50-2830SCFA	665-0002-0 00	Reel contact	30,000 pcs/reel	Gold plating
DF50K-2830SCFA	665-0017-8 00			
DF50-3032SCFA	Under development	———	———	———

(Note) As this product is sold 30,000 pcs/reel, please place orders by the multiple of the number of reels.

●Applicable wire (Tinned Annealed Copper Wire)

Part No.	HRS No.	Recommended wire		
		Cable name	Conductor size (Core structure)	Diameter of the wire
DF50-2830SCFA	665-0002-0 00	UL1061	AWG#28 (7 / ϕ0.127mm)	ϕ0.8 to 0.9mm
			AWG#30 (7 / ϕ0.102mm)	
DF50K-2830SCFA	665-0017-8 00	UL1571	AWG#28 (7 / ϕ0.13mm)	ϕ0.58mm

(Note) Please contact our Sales Department when you are using wires other than applicable wires.

●Strip length

1.3 to 1.7mm

◆Applicable crimping tool

Type	Part No.	HRS No.	Applicable contact
Applicator	AP105-DF50-2830S	901-4616-0	DF50-2830SCFA
Press body	CM-105	901-0005-4	———
Hand tool	HT305/DF50-2830HC	902-4634-8	DF50-2830SCFA
Contact pull-out tool	DF-C-PO(B)	550-0179-2	

(Note) Problems caused by tools other than our specified ones are out of warranty events.

◆Application Pattern

	Double Row	Single Row
Vertical	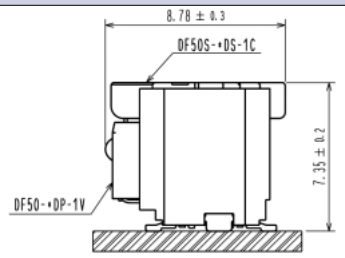	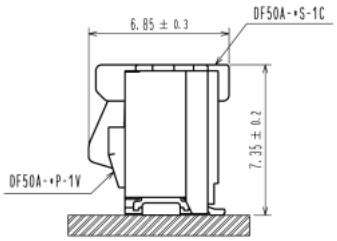
Horizontal	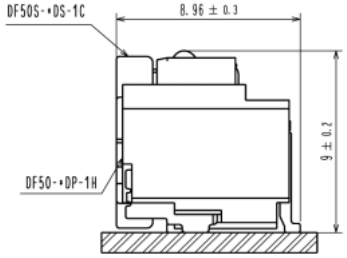	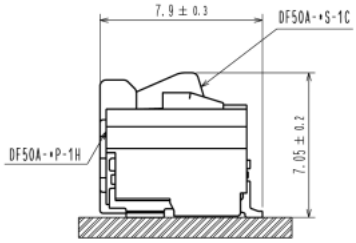

Mar.1.2016 Copyright 2016 HIROSE ELECTRIC CO., LTD. All Rights Reserved.

◆Precautions

1.Recommended Temperature Profile (Compatible with lead-free soldering)	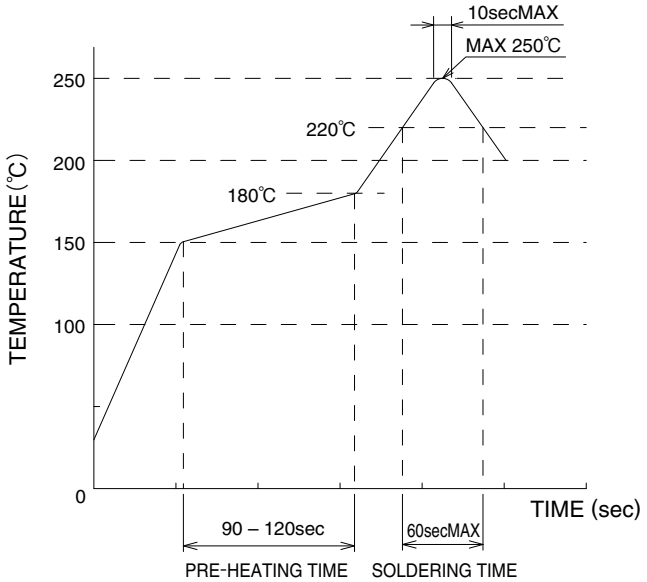 [Applicable Conditions] 1.Peak temperature: a maximum of 250°C for no more than 10 seconds 2.Heating unit: no less than 220°C for no more than 60 seconds 3.Preheating unit: 150 to 180°C for 90 to 120 seconds 4.Number of times: no more than 2 times ＊ Measurement is conducted at the contact lead part As it may change depending on the conditions such as solder paste types, manufacturers, PCB size, and other soldering materials, please fully check the mounting conditions before use. (Note 1) This temperature profile is a recommended value.
2.Recommended hand soldering conditions	Temperature of soldering iron: 350±10°C, soldering time: 3 to 4 seconds
3.Recommended screen thickness and aperture ratio (Pattern surface ratio)	Thickness: 0.1mm, aperture ratio: 100%
4.Warpage of the Board	A maximum of 0.02mm at the center of connector, as measured from either end of the connector
5.Cleaning Conditions	IPA cleaning is allowed. (Cleaning is not recommended because cleaning may change the push/pull feeling etc. Please contact us when you use other cleaning agents.)
6.Precautions	▪ When inserting a crimp contact into a crimp socket, do not insert it at a slanted angle in order to maintain the reliability of its performance. ▪ Please refrain from pushing/pulling operation when the PCB is not mounted. It may cause breakage, contact deformation, etc. ▪ Please refrain from pushing/pulling operation with wires in your hand. It may cause damage. ▪ During hand soldering, do not apply flux which will cause flux oozing on connector. ▪ This product may have a little difference in its molded color depending on the production lot, but the difference doesn't have any influence on the performance. ▪ Please refer to the operation manual for more information. ▪ Please refer to the documents "Cable assembly procedure", "Crimp condition"and "Crimp quality standards" for the cable assembly procedure.

Mar.1.2016 Copyright 2016 HIROSE ELECTRIC CO., LTD. All Rights Reserved.

USA:
HIROSE ELECTRIC (U.S.A.), INC. Headquarters
2688 Westhills Court, Simi Valley, CA 93065-6235
Phone : +1-805-522-7958
Fax : +1-805-522-3217
http://www.hiroseusa.com

USA:
HIROSE ELECTRIC (U.S.A.), INC. San Jose Office
3255 Scott Boulevard, Building 7, Suite 101
Santa Clara, CA 95054
Phone : +1-408-253-9640
Fax : +1-408-253-9641
http://www.hiroseusa.com

USA:
HIROSE ELECTRIC (U.S.A.), INC. Detroit Office (Automotive)
37677 Professional Center Drive, Suite #100C
Livonia, MI 48154
Phone : +1-734-542-9963
Fax : +1-734-542-9964
http://www.hiroseusa.com

THE NETHERLANDS:
HIROSE ELECTRIC EUROPE B.V.
Hogehillweg #8 1101 CC Amsterdam Z-O
Phone : +31-20-6557460
Fax : +31-20-6557469
http://www.hiroseeurope.com

GERMANY:
HIROSE ELECTRIC EUROPE B.V. German Branch
Herzog-Carl-Strasse 4 D-73760 Ostfildern
(Scharnhauser Park)
Phone : +49-711-4560-02-1
Fax : +49-711-4560-02-299
http://www.hirose.de

GERMANY:
HIROSE ELECTRIC EUROPE B.V. Nuernberg Office
Muggenhofer Str. 136 90429 Nuernberg
Phone : +49-911 32 68 89 63
Fax : +49-911 32 68 89 69
http://www.hirose.de

UNITED KINGDOM:
Hirose Electric Europe BV (UK Branch)
4 Newton Court, Kelvin Drive, Knowlhill,
Milton Keynes, MK5 8NH
Phone : +44-1908 202050
Fax : +44-1908 202058

CHINA:
HIROSE ELECTRIC (SHANGHAI) CO., LTD.
1601, Henderson Metropolitan, NO.300, East Nanjing Road, Huangpu District, Shanghai, China 200001
Phone : +86-21-6391-3355
Fax : +86-21-6391-3335
http://www.hirose-china.com.cn

CHINA:
HIROSE ELECTRIC (SHANGHAI) CO.,LTD. BEIJING BRANCH
A1001, Ocean International Center, Building 56# East 4th Ring Middle Road, ChaoYang District, Beijing, 100025
Phone : +86-10-5165-9332
Fax : +86-10-5908-1381
http://www.hirose-china.com.cn

CHINA:
HIROSE ELECTRIC TECHNOLOGIES (SHENZHEN) CO., LTD.
Room 09-13, 19/F, Office Tower Shun Hing Square, Di Wang Commercial Centre, 5002 Shen Nan Dong Road, Shenzhen City, Guangdong Province, 518008
Phone : +86-755-8207-0851
Fax : +86-755-8207-0873
http://www.hirose-china.com.cn

HONG KONG:
HIROSE ELECTRIC HONGKONG TRADING CO., LTD.
Room 1001, West Wing, Tsim Sha Tsui Centre, 66 Mody Road, Tsim Sha Tsui East, Kowloon, Hong Kong
Phone : +852-2803-5338
Fax : +852-2591-6560
http://www.hirose-hongkong.com.hk

TAIWAN:
HIROSE ELECTRIC TAIWAN CO., LTD.
103 8F, No.87, Zhengzhou Rd., Taipei
Phone : +886-2-2555-7377
Fax : +886-2-2555-7350
http://www.hirose-taiwan.com.tw

KOREA:
HIROSE KOREA CO., LTD.
1261-10, Jeoungwhang-Dong, Shihung-City, Kyunggi-Do 429-450
Phone : +82-31-496-7000,7124
Fax : +82-31-496-7100
http://www.hirose.co.kr

SINGAPORE:
HIROSE ELECTRIC SINGAPORE PTE. LTD.
10 Anson Road #26-1, International Plaza 079903, Singapore
Phone : +65-6324-6113
Fax : +65-6324-6123
http://www.hirose-singapore.com.sg

INDIA:
HIROSE ELECTRIC SINGAPORE PTE. LTD Delhi Liaison Office
Suite No. 606 5th Floor SB Tower 1A/1 Sector 16 A Filmcity Noida 201301 Uttar Pradesh-India
Phone : +91-120-4804917
Fax : +91-120-4804949
http://www.hirose.com/sg/

INDIA:
HIROSE ELECTRIC SINGAPORE PTE. LTD. Bangalore Liaison office
Unit No.03, Ground Floor, Explorer Building International Tech Park Whitefield Road, Bangalore 560066 Karnataka, India
Phone : +91-80-4120 1907
Fax : +91-80-4120 9908
http://www.hirose-singapore.com.sg

MALAYSIA:
HIROSE ELECTRIC SINGAPORE PTE. LTD (Representative office)
1-10-07, Suntech @ Penang Cybercity (1164),Lintang Mayang Pasir 3,11950, Bayan Baru, Penang, Malaysia.
Phone : +604-619-2564
Fax : +604-619-2574
http://www.hirose.com/sg/

Mar.1.2016 Copyright 2016 HIROSE ELECTRIC CO., LTD. All Rights Reserved.

Creative Links to World Electronics ®

HRS

HIROSE ELECTRIC CO.,LTD.
2-6-3,Nakagawa Chuoh,Tsuzuki-Ku,Yokohama-Shi 224-8540,JAPAN
TEL: +81-45-620-3526 Fax: +81-45-591-3726
http://www.hirose.com
http://www.hirose-connectors.com

HRS The characteristics and the specifications contained herein are for reference purpose. Please refer to the latest customer drawings prior to use.
The contents of this catalog are current as of date of 08/2014. Contents are subject to change without notice for the purpose of improvements.